Project Report

Student Name: Vishnu N S
UID: 24MCA20263
Branch: MCA
Section/Group: 3-A
Semester: 4th
Date of Performance: 13/04/2026
Subject Name: IOT LAB
Subject Code: 24CAP-751

Aim: IoT Based Smart Home System to control and monitor appliances from a remote location using NodeMCU and relay modules.

Objectives:

- To control and monitor household appliances from a remote location using the Internet.
- To switch appliances between manual control and automation.
- To integrate voice control using Google Assistant or Amazon Alexa.
- To control multiple appliances using a relay module and NodeMCU.

Components Required:

S.No	Name of Component	Quantity
1	NodeMCU (ESP8266)	1
2	Relay Module	1 (3 Channel)
3	16x2 LCD (I2C)	1
4	Push Buttons	2
5	Bulbs (Load)	3
6	Jumper Wires	As required
7	Power Supply (5V/USB)	1

Details of Components:

1. NodeMCU:

The NodeMCU board is a low-cost, open-source IoT platform widely used for building Internet-connected devices. It is based on the **ESP8266 Wi-Fi chip**, which integrates a microcontroller and wireless networking capability. This allows the system to communicate with cloud platforms and mobile applications to control appliances remotely.

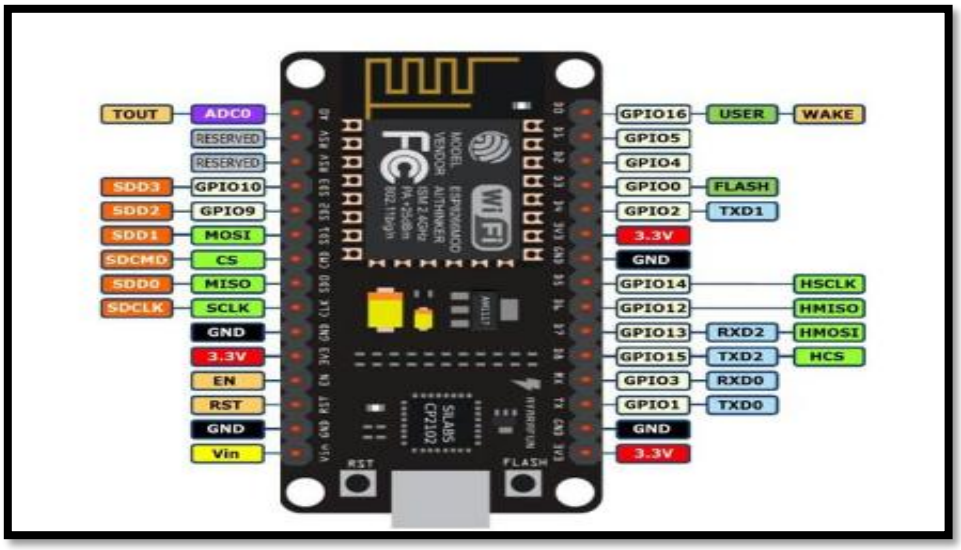

Figure 1 : NodeMCU Board

2. Relay Module:

A relay module acts as an electrically operated switch. It allows a low-power circuit such as the NodeMCU to control high-voltage electrical appliances safely.

In this project, a **3-channel relay module** is used to control **three bulbs independently**. Each relay channel is connected to one bulb, allowing individual switching through the NodeMCU.

Figure 2 : Relay Module

3. 16x2 LCD (I2C)

The 16x2 LCD display can show 16 characters per line with two lines. Using the I2C interface, the LCD requires only two communication pins from the NodeMCU, reducing wiring complexity.

The LCD displays:

- Appliance ON/OFF status
- Energy consumption
- Estimated electricity bill

Figure 3 : 16*2 LCD (I2C)

4. Push Buttons

Push buttons are used as manual switches to control appliances locally. These buttons provide an alternative control method if the internet or voice control is unavailable

Block Diagram of Designed Model:

The block diagram illustrates the interconnection between system components.

Main components include:

- NodeMCU (ESP8266) – main controller
- Sinric Pro Cloud Platform – used for remote and voice control
- Relay Module (3 Channel) – controls three bulbs
- LCD Display – shows appliance status and energy usage
- Push Buttons – manual control interface

The NodeMCU receives commands from the cloud platform and activates the relay channels to control the connected bulbs.

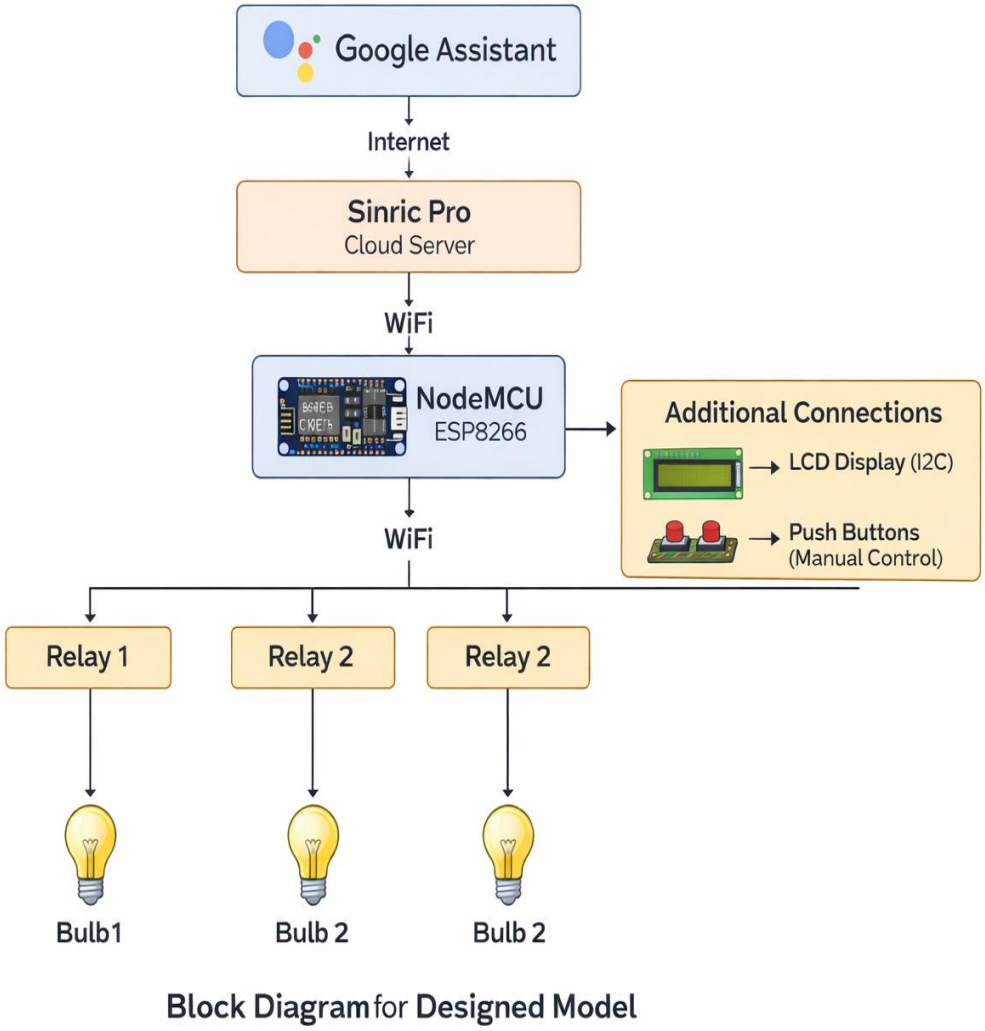

Figure 4 : Block Diagram of Model

Working of Designed Model:

1. Voice Control

The system integrates with voice assistants such as Google Assistant or Amazon Alexa.
When the user gives a voice command (for example, *"Turn on Light 1"*), the command is sent to the Sinric Pro cloud platform, which communicates with the NodeMCU through Wi-Fi.
The NodeMCU processes the command and activates the corresponding relay to switch the bulb ON or OFF.

2. Appliance Control

Each bulb is connected to a separate relay channel:

- Relay 1 → Bulb 1
- Relay 2 → Bulb 2
- Relay 3 → Bulb 3

This allows independent control of three appliances.

3. Energy Calculation

The NodeMCU monitors the electrical load connected to the relays and estimates the energy consumed in kilowatt-hours (kWh). This helps track electricity usage in real time.

4. Bill Calculation

Based on the total energy consumption and a predefined electricity tariff rate, the system calculates the estimated electricity bill.

5. EEPROM Storage

Important parameters such as:

- Energy consumption data
- Appliance states
- Tariff values

are stored in the NodeMCU's EEPROM memory, ensuring the data is not lost when power is turned off.

6. LCD Display

The LCD screen provides real-time information including:

- Bulb ON/OFF status
- Energy consumption
- Estimated electricity bill

This allows users to monitor the system locally without using a mobile app.

7. Button Functionality

Push buttons allow manual switching of appliances.
This provides:

- Immediate control
- Backup control when internet connection is unavailable

8. Pictures of Prototype

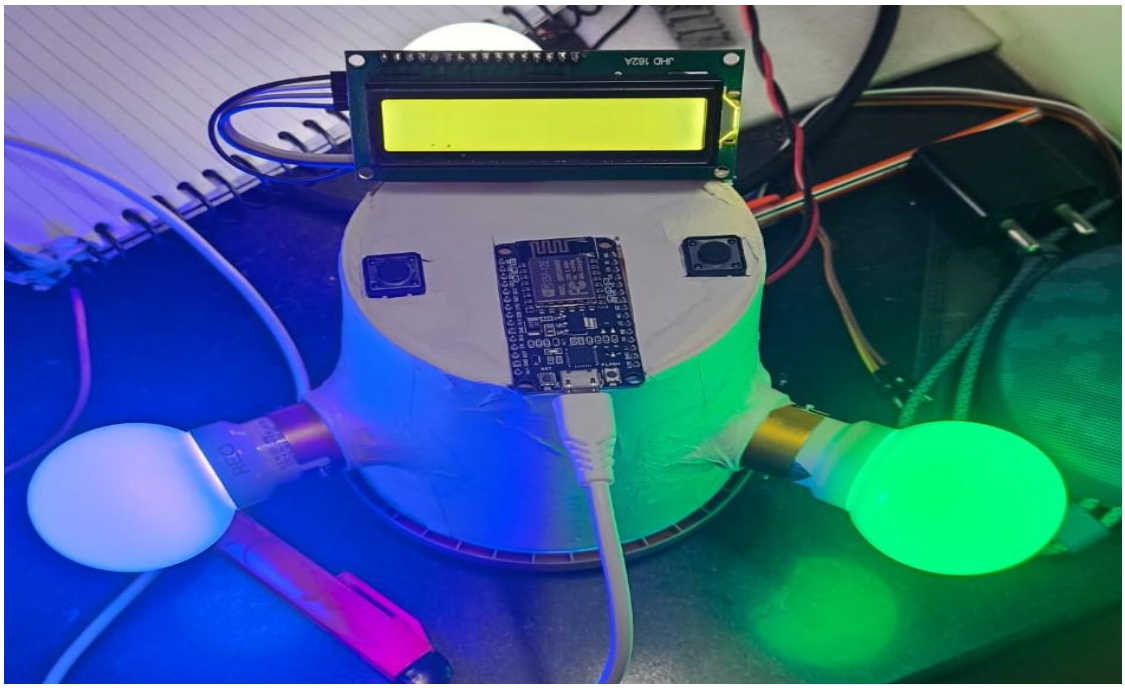

Figure 5 : Final Look Of The Model

The above image shows the physical prototype of the smart home automation system.
It includes:

- NodeMCU microcontroller
- LCD display module
- Three bulbs connected through a relay module

This demonstrates the working IoT-based smart home model.

9. Output of Designed Model / Prototype

This section typically includes:

- Screenshots from the mobile app interface (Sinric Pro)
- Voice assistant control demonstration
- LCD display showing energy consumption and bill estimation

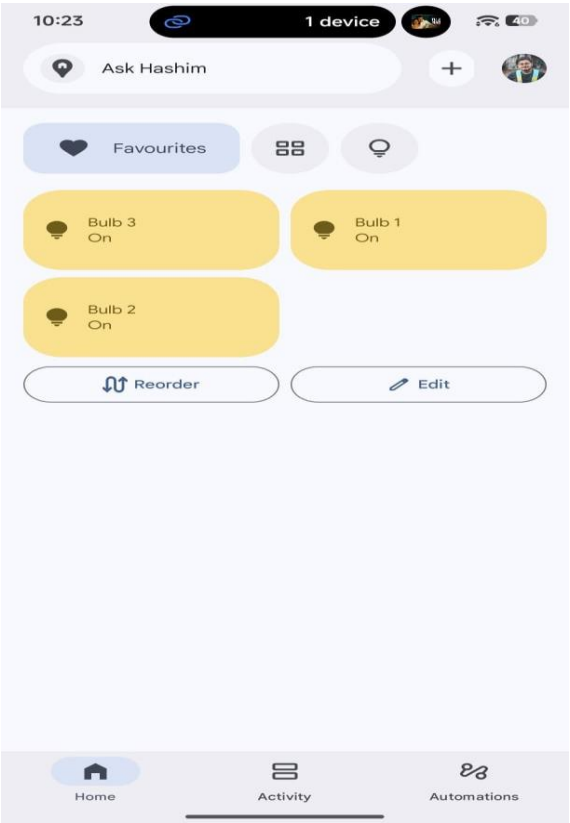

Figure 6 : Google Assistant Interface

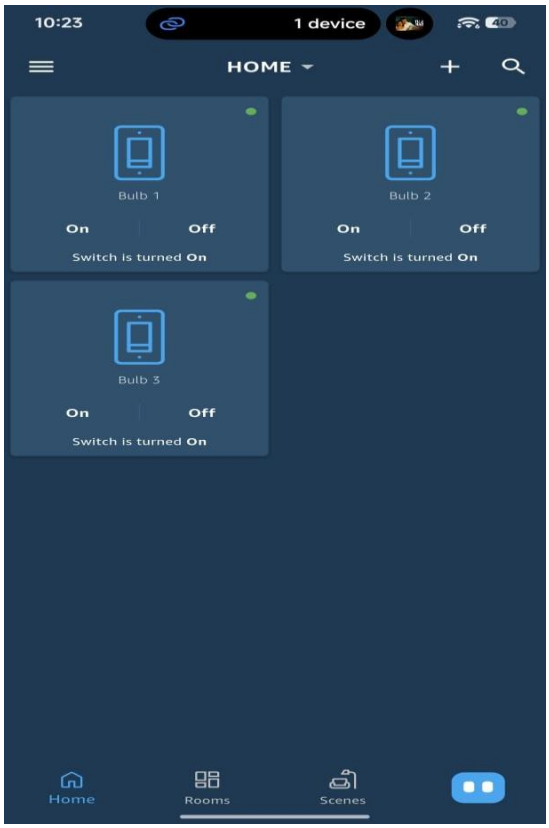

Figure 7 : Sinric Pro Interface

```
Output    Serial Monitor ×
Message (Enter to send message to 'NodeMCU 1.0 (ESP-12E Module)' on 'COM9')
SCREEN 1: Units & Bill
Units: 0.35
Bill: 2.82
Bulb3 Energy: 0.24
Bulb1 Energy: 0.25
Bulb2 Energy: 0.25
SCREEN 2: Message Displayed
SCREEN 1: Units & Bill
Units: 0.74
Bill: 5.95
```

Figure 8 : Serial Monitor Reading (Bill Estimation)

Learning outcomes :

- Gained practical experience in developing IoT-based systems using NodeMCU (ESP8266).
- Learned how to integrate cloud platforms like Sinric Pro for remote device control.
- Understood the concept of voice-controlled automation using Google Assistant or Alexa.
- Developed skills in interfacing hardware components such as relay modules, LCD displays, and push buttons with microcontrollers.
- Learned how to control multiple appliances using a multi-channel relay module.
- Gained knowledge of basic energy monitoring and electricity bill estimation in IoT systems.
- Improved practical skills in testing, troubleshooting, and implementing smart home automation systems.